"ERA-NET Plus Actions"

PROVISIONS FOR THE PREPARATION OF ERA-NET PLUS ACTIONS AND THEIR PRACTICAL IMPLEMENTATION

A draft issue paper serving as background document[1]

RTD B.1
Coordination of national research programmes
Version 2
Date: October 2009

Disclaimer
This document expresses solely the current views of Research Directorate General of the European Commission. Readers should not regard these views as a statement of the official position of the European Commission.

[1] This document intends to give draft information to support the preparation of ERA-NET Plus actions under FP7

Table of contents

1 GENERAL ASPECTS 3

1.1 OBJECTIVE AND RATIONALE 3
1.2 DEFINITION OF THE ACTION 4

2 FUNDING SCHEME TO BE USED 4

3 PARTICIPANTS 5

3.1 TYPES OF PARTICIPANTS 5
3.2 NUMBER OF PARTICIPANTS 5
3.3 PARTICIPATION AND FUNDING OF PARTICIPANTS FROM THIRD COUNTRIES 6

4 ACTIVITIES TO BE SUPPORTED WITHIN AN ERA-NET PLUS 6

4.1 PRINCIPLES 6
4.2 ERA-NET PLUS – PHASE 1: LAUNCHING AND MANAGING OF A JOINT CALL (REPORTING PERIOD 1) 7
4.2.1 Management of the joint call by the call coordinator 7
4.2.2 Preparation of the joint call: definition and specification 8
4.2.3 Call publication and advertising 8
4.2.4 Evaluation Step One 8
4.2.5 Evaluation Step Two - Evaluation of the full proposals by an international peer review 9
4.2.6 Final selection of the transnational projects from the joint call 10
4.3 ERA-NET PLUS PHASE 2: TOPPING UP OF THE JOINT CALL BUDGET AND IMPLEMENTATION OF SELECTED PROJECTS 11

5 PARTICULARITIES OF THE ERA-NET PLUS GRANT AGREEMENT 12

5.1 ELEMENTS OF THE GRANT AGREEMENT 12
5.2 PRE-FINANCINGS AND INTERIM PAYMENTS 12
5.3 PERIODIC REPORTING REQUIREMENTS 13
5.3.1 First Periodic Report 13
5.3.2 Periodic Reports for Periods during Phase 2 of an ERA-NET Plus 14
5.4 SPECIFIC OBLIGATIONS ON THE BENEFICIARIES AND THIRD PARTIES CONCERNING CERTIFICATES ON FINANCIAL STATEMENTS 16
5.5 FINANCIAL AUDITS AND CONTROLS 17

6 PROPOSALS FOR ERA-NET PLUS ACTIONS AND THEIR EVALUATION 17

6.1 CALLS FOR PROPOSALS 17
6.2 CONTENT OF A PROPOSAL 17
6.3 EVALUATION OF PROPOSALS 18

7 GRANT AGREEMENT NEGOTIATION 19

8 POSSIBLE CORRECTIONS AFTER PHASE 1 20

9 POSSIBLE EVOLUTION OF AN ERA-NET PLUS 20

10 CONSORTIUM AGREEMENT 21

11 INTELLECTUAL PROPERTY ASPECTS 21

12 FOLLOW UP AND MONITORING 21

13 INFORMATION AND ASSISTANCE 22

APPENDIX 1: PARTICIPANT DECLARATION 24

APPENDIX 2: SPECIFIC ANNEX III OF THE MODEL GRANT AGREEMENT FOR ERANET-PLUS 27

The "ERA-NET Plus" Action

The ERA-NET scheme is one of the tools of the Seventh Framework Programme (FP7) to support the coordination of non-Community research programmes. It comprises two actions, ERA-NET and ERA-NET Plus. It is implemented under both the Cooperation and Capacities programmes of FP7. Annex IV to the Cooperation Work Programme describes the legal basis for the whole ERA-NET scheme.

The purpose of this document is to provide some additional information solely on the ERA-NET Plus action, which is a completely new approach towards the coordination of national[2] research programmes under FP7 through the combined research funding between Member States and the Commission FP. This approach may lead to more alignment of programme strategies between national programmes and FP7 themes. It may assure, for the areas concerned, more complementarity between national and Community programmes and therefore contributes strongly to the structuring of the European Research Area.

General aspects of the overall ERA-NET scheme, and in particular aspects of regular ERA-NET actions, are described in a separate document called "Provisions for the preparations of ERA-NET actions and their practical implementation" and published on http://cordis.europa.eu/fp7/coordination/eranet_en.html

1 GENERAL ASPECTS

1.1 Objective and Rationale

The ERA-NET Plus Actions will provide a Community financial contribution to those national research programmes that pool financial resources to organise and fund a joint call for transnational research projects. ERA-NET Plus will apply only in a limited number of cases, those which are of particular European added value. The projects financed via an ERA-NET Plus joint call shall address predefined, well specified and focused areas of common interest between a certain number of Member States and the Community. ERA-NET Plus will enable national programmes, together with the Community programmes, to address research topics that, due to the nature of the field, are better addressed jointly or which could not have been addressed independently.

The research area of the ERA-NET Plus must be pre-defined in the Cooperation or Capacities Work Programmes.

ERA-NET Plus Actions will provide a new type of funding opportunity for researchers to enter into transnational research projects. In this respect ERA-NET Plus Actions should provide, through their close links to national programmes, fast, easy and simple ways to set up transnational projects.
Combined funding for transnational research projects with different national and Community contributions represents a new approach, exploring possible future public research funding mechanisms in the enlarged EU with the possibility to use a variable geometry.

ERA-NET Plus Actions are both contractually and content wise completely independent from the ERA-NET Actions. Each ERA-NET Plus is a stand-alone action with a research objective, as

[2] National programmes should be understood as national and/or regional programmes

defined in a specific call for ERA-NET Plus Actions published in a FP7 Work Programme and with specific EU added value. None of the activities or tasks carried out through an ERA-NET Plus can be covered in an ERA-NET or any other FP grant agreement. For example the monitoring of the transnational projects, selected through an ERA-NET Plus joint call, can not be supported by another ERA-NET or any other FP7 grant agreement. While it is possible that the joint scientific programme, from which the joint call originates, could have been developed in an ERA-NET Action, the joint call itself cannot be prepared nor managed through another EC grant agreement/funding scheme (e.g. ERA-NET).

1.2 Definition of the Action

ERA-NET Plus Actions comprise the joint implementation of a transnational call from the preparation and the publication of the call to the evaluation, selection and funding of proposals as well as the project monitoring and follow-up between several national or regional programmes. They require programme owners or programme managers from at least five different Member States (MS) or Associated States (AS) to implement a single joint call with a financial commitment from the participating national or regional research programmes. **The main deliverable of an ERA-NET Plus joint call shall be an agreed joint selection list for funding of transnational projects, including the formal commitment of the participating programmes to finance these projects**. The Community can subsequently agree on a "topping up" of the call resulting in **up to 33%** of the total cumulative funding of the joint call budget. The main characteristics of an ERA-NET Plus Action are summarised below. ERA-NET Plus means:

- A single joint call for transnational projects respecting the competition rules
- Participation of at least 5 Member States or Associated States in the single joint call
- Minimum total financial volume of the single joint call: 5 million €, including the EC contribution
- Joint evaluation and selection of proposals based on a 2 step procedure, with step 2 being based on an independent international peer review and on excellence criteria
- The duration of an ERA-NET Plus cannot exceed 5 years.

2 FUNDING SCHEME TO BE USED

The funding scheme to be used for ERA-NET Plus Actions is the "Coordination and Support Actions (Coordinating) CSA[3] ERA-NET Plus". This is a specific CSA funding scheme with specific financial dispositions for ERA-NET Plus Actions which differs from the classical CSA**.**

The Community contribution shall take the form of a grant which will reimburse:

- The eligible costs as an agreed proportional contribution to the national funds pooled for financing the selected transnational projects. Therefore, the eligible costs in this funding scheme are the actual grants paid to the transnational projects by the participating national or regional programmes (Phase 2, see point 4 below)[4].
- As an option: the eligible costs for activities relating to the implementation and management of the joint call (from the launch of the call till the establishment of the short list of selected transnational projects). The reimbursement can cover up to 100% of the eligible cost for the additional activities of "coordination and management" related to the call preparation and publication, the proposals evaluation and the management of the joint call (Phase 1, see point 4 below).

[3] Funding schemes established in Annex III to the Framework Programme.

[4] For the negotiation purposes these costs should appear under the category OTHER

However, reflecting the rationale and the principle of "topping-up" of ERA-NET Plus Actions, the total Community contribution is only calculated as a percentage (which cannot be higher than 33%) of the joint call budget to fund the transnational projects. The use of a small part of the total Community contribution for the reimbursement of the eligible cost of the Phase 1 is merely optional. If taken, participants must be aware that eligible costs of Phase 1 (management and coordination costs) are part of the total maximum Community contribution and thus will consequently reduce the Community contribution available for the funding of transnational projects (Phase 2, see point 4 below).

3 PARTICIPANTS

3.1 Types of participants

Eligible partners for ERA-NET PLUS Actions are only:

- Programme owners, typically national ministries/regional authorities responsible for defining, financing or managing research programmes carried out at national or regional level.
- Programme "managers", such as research councils or funding agencies, or other national or regional organisations that implement research programmes under the supervision of the programme owners.

In addition to the minimum number of eligible participants, other private legal entities such as charities, or other private organisations, which also manage research programmes that are strategically planned and executed at national/regional level, may participate in the joint call and receive Community funding, but only if they are in addition to the minimum number of eligible participants legally required for an ERA-NET Plus.

It should be stressed that research organisations or universities which are NOT programme owners or managers are NOT eligible ERA-NET Plus participants.

3.2 Number of participants

For ERA-NET Plus Actions, the minimum number of eligible participants is five (5) independent legal entities funding or managing national research programmes from five different Member States or Associated States.

Sole participants (as referred to in Article 10 of the Rules for Participation[5]) may be eligible if the above-mentioned specific criteria for eligible ERA-NET Plus partners are respected. A sole participant shall explicitly indicate which of his members is either a programme owner or programme manager and indicate for these members the respective national/regional programmes which are at the disposal of the proposed ERA-NET Plus Action.

It has to be emphasised that, in general, it is expected that ERA-NET Plus Actions will involve a more substantial number of Member States or Associated States than the legally required minimum number of five in order to obtain a significant impact at European level. Furthermore potential consortia are advised to propose reasonably balanced national contributions to the joint call planned between all participating national programmes.

[5] Article 10, Sole participants: Where the minimum conditions for an indirect action are satisfied by a number of legal entities, which together form one legal entity, the latter may be the sole participant in an indirect action, provided that it is established in a Member State or associated country.

3.3 Participation and funding of participants from Third Countries

ERA-NET Plus Proposals are encouraged, as appropriate, to adopt a global approach involving also non European research programmes beyond the minimum eligibility conditions. This global approach is aligned with the new scheme of International Science and Technology (S&T) Cooperation adopted under FP7.

These duly justified cases for cooperation at global level in a joint call must be beneficial from a European point of view.

Any participation of Third Countries in an ERA-NET Plus Action has to follow the general principles for Third Country participation in FP7 as defined in the rules for participation:

Participants' location	**Participation**	**Funding**
European Union	Rightfully	Rightfully
Associated countries	Rightfully	Rightfully
International organisations of European interest	Rightfully	Rightfully
International cooperation partner countries	Rightfully over and above the minimum threshold	Rightfully
International organisations or third countries other than those referred to above	Rightfully over and above the minimum threshold	If at least one of the following conditions is met: (a) provision is made in the relevant work programme; (b) it is essential for carrying out the action; (c) funding comes from bilateral S&T agreement between Community and country where participant is established

4 ACTIVITIES TO BE SUPPORTED WITHIN AN ERA-NET PLUS

4.1 Principles

As introduced in Chapter 2, an ERA-NET Plus Action is divided into two phases of activities:

- Phase 1 of the ERA-NET Plus (constituting, in principle, the first reporting period):

  Activities of "coordination and management" strictly related to the call preparation and publication, the proposals evaluation and the management of the joint call until the formal release of the short list of selected transnational projects and of the funding decisions from the national or regional programmes. This preparatory work can be supported by Community funding, but only with a small and limited amount.

- Phase 2 of the ERA-NET Plus (all following periods, in principle, from reporting period 2):

  The funding of the selected transnational projects, for which by far the largest part of the FP7 EC contribution is destined. In contrast to ERA-NET actions, management activities

in this phase, such as the monitoring and the follow-up of the selected transnational projects, will not be supported by the Community contribution and shall therefore be solely covered by the combined efforts of the participating national or regional programmes.

4.2 ERA-NET Plus – Phase 1: Launching and managing of a joint call (reporting period 1)

It is expected that, prior to the submission of the proposal for an ERA-NET Plus Action, a pre-existing base for the cooperation and preliminary agreements on the activities necessary to launch a joint call exist between the potential participants, as well as a scientific rationale like a joint scientific work programme. However it is still possible to finalise some tasks in Phase 1 before the actual publication of the transnational joint call.

As an option proposed to the participants, additional activities in this Phase can be subject to Community funding. These additional activities should be understood as those activities which are necessary to assure that the planned call is a real transnational joint call between different national programmes. This means that activities, which would be in any case necessary for the launching and managing of a purely national call for proposals are NOT eligible for Community funding. In any event ERA-NET Plus Actions are intended to support research actions and thus the Community funding requested for Phase 1 should be limited to the minimum.

Experiences from FP6 have shown that a two step evaluation procedure is necessary for these types of joint calls. A first step, normally dealing with "light" proposals or expressions of interest, allows the assessment of the potential number of applications and ensures that only those proposals which fulfil the eligibility and quality criteria of the participating national programmes are invited for the submission to step two. This avoids excessive over- subscription and waste of resources for submission of full proposals and their evaluation, as well as potential frustration due to a low success rate. It also allows national programmes to anticipate the requested potential funding and enables possible adjustments of their initially planned national contribution to the joint call. Experience from ERA-NETs and ERA-NET plus calls shows that a good indication is a success rate of 1 out of 2-3 proposals for those invited to stage 2. The mandatory two step procedure leaves step one of the evaluation open to specific requirements of the participating national programmes, whereas the criteria in step two of the evaluation are almost fully pre-defined (see under 4.2.5 below). While all national specificities of the participating programmes have to be fully checked in step one to ensure that only proposals which would be funded by all national programmes concerned are invited to step two, it is highly recommended to make sure that only the best ideas are invited to step two.

It is required that step two of the evaluation, dealing with "complete" proposals, takes place at transnational level using a centralised proposal reception and evaluation. This process shall assure an equal and fair treatment of all submissions and has to be based on a single international peer review. The evaluation process shall focus on excellence criteria and can in no way include aspects like national participation/interests or geographical return. Therefore the minimum evaluation criteria (see 4.1.5 below) are set by the Commission grant agreement.

4.2.1 Management of the joint call by the call coordinator

It is highly recommended that a strong and central coordination of all call related activities is established. It could be beneficial to designate a so-called "call coordinator" which would normally, but not necessarily, be the coordinator of the ERA-NET Plus action.

It is important to remember that core tasks (especially those related to the role of a coordinator in an ERA-NET Plus action) can not be subcontracted (see Art. II.2, FP7 Grant Agreement).

Possible eligible activities for management of the joint call could be:

- Organising all preparatory work like meetings, workshops etc.
- Establishment of a joint "real or virtual" call office (e.g. helpdesk, information exchange, ...)
- Transnational coordination of proposals reception
- Preparation of step one evaluation and the transnational eligibility check
- Preparation of the international peer review for the step two evaluation

4.2.2 Preparation of the joint call: definition and specification

This activity will define the success of the ERA-NET Plus joint call and needs participation and firm commitment from ALL consortium members contributing with funding to the joint call. During this process key issues will be addressed.

Possible activities for definition and specification of the joint call:

- Exact final call text definition (including presentation of the evaluation in two steps)
- Define and pre-commit national call contributions
- Agree on common eligibility and participation rules and necessary measures to have efficient step one procedures
- Final agreement on the format of the complete proposals and the submission procedure to step two of the evaluation
- Formal agreement on legal and IPR issues, as appropriate.

4.2.3 Call publication and advertising

This activity covers the formal publication of the joint call for transnational projects. It shall call for the submission of proposals to the step one evaluation, as defined by the consortium. Furthermore, the publication shall make the overall evaluation procedure public and allow for fair and transparent competition for all potential proposers and consortia and shall mention that the joint call is co-financed by the European Commission's Seventh Framework Programme.

The joint call shall remain open for the submission of proposals (in step one, as well as in step two) by interested parties for a period of at least eight weeks. In addition to the publication in the participating countries through the national programmes, the consortium shall publish the call in at least one international journal. It shall take measures for advertising the call widely using specific information support, particularly internet sites, the specialist press and brochures and through the national contact points set up by Member States and Associated countries.

The *consortium* shall inform the *Commission* of the call and its content at least 30 days prior to its expected date of publication.

4.2.4 Evaluation Step One

As already introduced above, step one deals normally with "light" proposals or expressions of interest to allow the assessment of the potential number of applications.

Step one of the evaluation may be organised in a decentralised way, but needs to be well coordinated to reflect the different national programme rules. The whole consortium agrees

collectively, which proposers will be invited for submission of a full proposal under step two of the evaluation organised in a centralised way. Consortia invited to step two must be eligible for funding by all national programmes involved in the joint call.

The consortium shall establish clear rules for step one ensuring transparency for proposers and avoiding any potential conflict of interest during the evaluation and selection procedures.

Possible activities for the step one evaluation could be:

- Transnational part of pre-proposal checks or expressions of interests, if appropriate (costs of national checks that belong to national rules and that would have been performed anyway, if the call would have been national, are not eligible for EC contribution);
- Establishment of transnational electronic communication and submission tools, including the use of common portals;
- Specific consortium meetings with the help of possible external experts to select the invited proposers.

4.2.5 Evaluation Step Two - Evaluation of the full proposals by an international peer review

In step two, the full proposals are submitted to a unique facility and evaluated centrally through a joint and independent international peer review. This step is the most important one in an ERA-NET Plus, resulting in a ranked list of proposals agreed by the international peer review panel, which determines the proposals selected for funding. This step can be partially remote[6].

The following evaluation criteria, scores and thresholds (as specified for collaborative research projects in FP7) are compulsory for the evaluation by international peer review in step two of the joint call:

- Scientific and/or technological excellence - Quality of the *transnational project* (Threshold 3/5)
  - Sound concept, and quality of objectives
  - Progress beyond the state-of-the-art
  - Quality and effectiveness of the scientific and technological methodology and associated work plan

- Quality and efficiency of the implementation and the management (Threshold 3/5)
  - Appropriateness of the management structure and procedures
  - Quality and relevant experience of the individual participants
  - Quality of the consortium as a whole (including complementarity, balance)
  - Appropriate allocation and justification of the resources to be committed (budget, staff, equipment)

- Potential impact (Threshold 3/5)
  - Contribution, at the European and/or international level, to the expected impacts listed in the FP7 work programme under relevant topic/activity
  - Appropriateness of measures for the dissemination and/or exploitation of *transnational projects* results, and management of intellectual property.

[6] In case of remote peer review evaluation, final deliberations and ranking remain in any case the prerogative of an international panel convening at the end of the process

The step two evaluation aims at selecting and ranking excellent proposals based on the above three sets of criteria. Neither national interests nor principles of geographical return shall influence the evaluation process at this stage. Only in well justified cases, related to specificities of the call topic and/or type of research, additional sub-criteria may be introduced. Each proposal submitted to this second step shall be evaluated with the assistance of at least three independent experts appointed by the consortium.

The consortium shall ensure that the principle of confidentiality is upheld and that any case of conflict of interest is avoided during the evaluation and selection procedures of the joint call. The consortium furthermore has to ensure the participation of a Commission observer to the step two evaluation. It is also highly recommended to appoint an independent observer to report on the actual evaluation process.

Possible activities for the international evaluation of the full proposals could be:

- Setting up of the transnational evaluator panel
- Joint transnational briefing activities for evaluators if appropriate
- Transnational evaluation process with invited independent international experts

4.2.6 Final selection of the transnational projects from the joint call

This comprises the activities necessary for the formal release of the two main deliverables of the ERA-NET Plus: an agreed ranked list of transnational projects selected for funding and the formal funding decisions from the participating national or regional programmes. Those deliverables mark then the end of the first phase. The agreed list of projects selected for funding must be based solely on the result of the step two evaluation. No mechanisms of national interests or geographical return can influence the final selection as the Community contribution cannot serve such purposes.

In case of any indications of a breach of the above described rules or any other unfair and/or non-transparent selection process where, for example, scientifically excellent projects were skipped, due to missing funding or where the order of the selection list was influenced/changed by national interest or any kind of national return mechanism, the Commission will NOT accept the evaluation result and the selection list. The consortium would be considered to be in breach of one of the main principles for ERA-NET Plus, which is to guarantee a selection of transnational projects based on competition rules and excellence criteria (see Annex III of the model grant agreement for ERA-NET Plus). In such case the Commission reserves its contractual right to stop the ERA-NET Plus grant agreement immediately after such irregularities are discovered.

Possible activities for the final selection could be:

- Specific meetings for formal agreement on the final selection list and the formal funding decisions of the transnational projects by the consortium

- Submission of the 1st periodic report with the ranked list of selected proposals and the funding decisions from the participating programmes.

4.3 ERA-NET Plus Phase 2: Topping up of the joint call budget and implementation of selected projects

The partners are expected to establish a robust and coherent governance and administrative framework around the coordinator for the implementation of the funding of the projects, as well as their follow-up. The coordinator of the joint call will act as interface to receive and distribute the Community contribution to the consortium of programmes.

The sole eligible cost for a Community contribution under phase two is the actual funding of the transnational projects by the national or regional programmes of the participants in the grant agreement. No other activity, including the management and the monitoring of the transnational projects (contracts follow-up, project process monitoring) will involve the Commission nor be eligible for Community funding at this phase. The monitoring of the transnational projects shall be organised and funded jointly by the participating funding programmes. In sharing these costs for the monitoring, the individual national contributions to the monitoring costs are expected to be largely reduced compared to an individual monitoring organised on a purely national scale.

For the calculation of the Community contribution only the actual contributions from the members of the consortium (participants in the grant agreement) to the joint call budget (grants to fund transnational projects) constitute the basis. In other words, the contributions of (other) national or regional programmes, not being part of the consortium, to transnational projects can not be considered for the calculation of the EC contribution.

In the periodic reporting on the actual funding of the transnational projects by the programmes, the consortium shall report on the use of the Community topping-up and provide the Commission with a general overview of the progress of the jointly funded projects (to assure synergies if appropriate and/or avoid overlaps with FP funded projects and provide indicators of impact attributable to the ERA-NET Plus Action). The assessment of the impact of the action will be an important reporting requirement for ERA-NET Plus Actions.

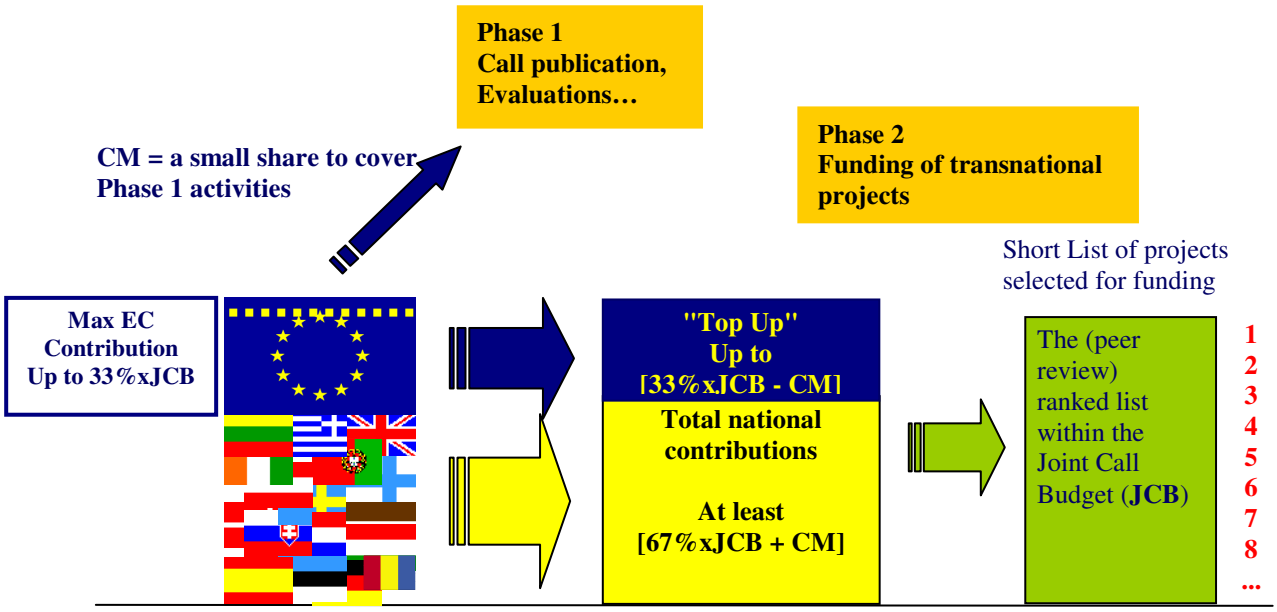

Final agreed selection list of projects:
No changes allowed to the ranked list established by Step Two peer review

5 PARTICULARITIES OF THE ERA-NET PLUS GRANT AGREEMENT

5.1 Elements of the Grant Agreement

There are a number of particularities for ERA-NET Plus Grant Agreements. The Grant Agreement is, as a rule, composed of the following elements:

- The core grant agreement specifying the scope, duration, amount of the Community grant, reporting schedule and payment modalities, and the list of initial participants;
- A technical annex (Annex I) containing the objectives of the ERA-NET, and descriptions of the joint activities, the role of the participants, the deliverables, the ethical provisions, and the management and governance structure;
- General conditions (Annex II) common to all FP7 funding schemes, covering standard legal and administrative provisions, the IPR regime if necessary, and standard financial provisions among others;
- The specific Annex III for ERA-NET Plus Action (see below)
- Forms A (accession to the project), B (new participant), C (Financial Statement – specific for ERA-NET Plus) and D (Terms of Reference for the certification of Financial Statements).

5.2 Pre-financings and interim payments

Within the FP7 contractual framework, the EC contribution to an ERA-NET Plus action is a grant to the budget of the joint call for the funding of transnational projects. In operational terms, it is a reimbursement of up to 33% of the costs incurred by the participating national programmes through the payment of grants to the transnational projects (Phase 2). As already explained above, a limited part of this contribution can be used for the reimbursement of management and coordination activities in Phase 1.

This reimbursement is provided to the consortium through a pre-financing mechanism, specific to the ERA-NET Plus Grant Agreement. Following its signature, a first pre-financing is transferred, one part to the consortium to cover Phase 1 and one part to the Guarantee Fund[7]. The actual EC contribution that can be claimed by the consortium cannot exceed the amount of total costs agreed at the signature of the Grant Agreement for this Phase 1.
Once the short-list of selected projects and the national funding decisions are received and accepted by the Commission, Phase 2 can start and a second pre-financing, for the second period, is paid as a topping-up of the funding of the first 12 months to the transnational projects. The wording of ANNEX III.5 paragraph 5 would not exclude a second reporting period of 18 months duration. Yet, for negotiation purposes, the amount of EC contribution agreed for this 2nd period should take into consideration only the indicative expected amount for the topping-up of the first 12 months funding to the transnational projects.

It should be noticed that the definition of the reporting periods for Phase 2 should be carefully chosen and agreed with the Commission services during negotiation. In particular, the dates of reporting from the funded individual projects to the national programmes need to be coordinated with the reporting periods from the consortium of the ERA-NET Plus to the Commission.

[7] See Art.6, II.20 and III.7 of the Grant Agreement.

Thereafter interim payments shall be made following each reporting period of Phase 2 that will be defined in the Grant Agreement. Interim payments will be based on the actual costs incurred and reported during the previous period and accepted by the Commission.

As a result of these reimbursement rules the total funding for the call to be allocated to the selected transnational projects stems from two sources: the national programmes of the participating countries and the Community contribution.

The grant awarded to any selected project shall be in line with the general rules for publicly funded research projects[8].

5.3 Periodic Reporting requirements

5.3.1 First Periodic Report

The first Period covers Phase 1 of the ERA-NET Plus where the eligible costs are those linked to management and coordination activities as in a classic Grant Agreement for a Coordination or Support Action. The 1st periodic reporting has to respect the requirements as explained in the "Guidance Notes on Project Reporting" for FP7 CSA Grant Agreements. It will report on the activities performed in Phase 1 until the date of release of the shortlist of transnational projects selected for funding together with the funding decisions from the participating funding programmes.

The coordinator, and possibly other beneficiaries or third parties involved in this Phase, claims on Form C only costs related to the management of the project which should be encoded in Column (C) of section 1. The total costs claimed should not be higher than the amount agreed in the Grant Agreement for the 1st Period.

The specific Form C for ERA-NET Plus actions looks as follows:

FP7 - Grant Agreement - Annex VI - Coordination and Support Action - ERANET Plus actions					
Form C - Financial Statement (to be filled in by each beneficiary)					
Project nr	nnnnnn		Funding scheme	Coordination and Support Action	
Project Acronym	xxxxxxxxxxxxxxxxxxxx				
Period from	dd/mm/aa	Is this an adjustment to a previous statement ?			Yes/No
To	dd/mm/aa				
Legal Name			Participant Identity Code		nn
Organisation short Name			Beneficiary nr		nn
Funding % for RTD activities (A)			If flat rate for indirect costs, specify %		%
1- Declaration of eligible costs/lump sum/flate-rate/scale of unit/funding of the joint selection list of trans-national projects (in €)					
	Type of Activity				
	RTD (A)	Demonstration (B)	Management (C)	Other (D)	TOTAL (C+D)
Personnel costs					
Subcontracting					
Other direct costs					
Indirect costs					
Lump sums/flat-rate/scale of unit declared					
Total Funding of the Joint Selection List of Trans-National Projects					
Total					
Maximum EC contribution					
Requested EC contribution					

[8] Existing state aid rules for public research funding apply

5.3.2 Periodic Reports for Periods during Phase 2 of an ERA-NET Plus

As from the end of Period 2 onwards, the coordinator and the other *Beneficiaries* or *Third Parties* claim on their Forms C the total amount accepted, verified and paid covering the funding of the transnational projects selected. This amount should be encoded in Column (D) in the field "Total Funding of the joint selection list of transnational projects"' of section 1.

Due to the specificities of ERA-NET Plus, there are requirements for Phase 2 which are not included in the general reporting guidelines of FP7.

It is therefore recommended that during the negotiation of **Annex I,** a specific "guideline" for a comprehensive reporting is included. Below is an example, which could be even further elaborated on a case by case basis according to the specific needs of each project. It could be attached in a specific appendix to the Annex I or be incorporated in it elsewhere, as deemed appropriate:

To complete the requirements for reporting as described in Article II.4, and in line with the ERA-NET Plus Form C, the Periodic Reports covering Phase 2 of this ERA-NET Plus action (funding of transnational projects, starting from Period 2) shall include:

(a) For each reporting period and for each [Beneficiary] [Third Party identified in Art. 7 (special clause 10) of the Grant Agreement]

Legal Name of the [Beneficiary] [Third Party]				
Transnational Projects	*Total amount granted (accepted and paid) during P2*	*Total amount granted (accepted and paid) during P3*	*Total amount granted (accepted and paid) during P4*	*TOTAL*
Project 1 [define the project specifics (i.e. name, number, final beneficiary (ies) etc) and its co-funding national programme(s)]				
Project 2 [define the project specifics (i.e. name, number, final beneficiary (ies) etc) and its co-funding national programme(s)]				
Project 3…..				
…				
Project X				
Total				

This table will be sent with copies of the declaration signed by the authorised representative of each [Beneficiary] [Third Party], *confirming that all the grants (s) have been paid and verified according to the usual funding and accounting rules and verification principles of the relevant national programme(s). In this declaration the [Beneficiary] [Third Party] will confirm the following:*

- It has verified that the requests from the final beneficiaries of the transnational projects comply with national rules concerning the eligibility of the cost claimed;
- Accurate and exhaustive accounts are kept by the [Beneficiary] [Third Party] and the final beneficiaries of the transnational projects;
- The checks laid down by national legislation as well as those foreseen by the [Beneficiary] [Third Party] are actually carried out and properly documented;
- On-the-spot controls or audits of the transnational project are performed by Beneficiaries, Third Parties or their control bodies in order to check the eligibility of the costs claimed by the final beneficiaries of the transnational projects;
- The documents are accessible to the Court of Auditors and the Commission services, including the OLAF (Anti-Fraud office) and kept for a period of at least 5 years after the end of the project, in a manner which ensures their completeness, validity and readability over time, including electronic documents within the meaning of the relevant national rules and any relevant Community rule;
- It has taken effective measures to avoid any double funding of final beneficiaries of the transnational projects from other Community fund sources, and in particular from the 7th Framework Programme. The Beneficiaries and/or their Third Parties shall also ensure that the "national" contribution to the final beneficiaries of the transnational projects does not contain EU funding from other sources;
- That the rules for State aid are respected, in particular the rules set out in the Community framework for State Aid for Research, Development and Innovation;
- If any amount is unduly paid to the final beneficiaries of the transnational projects, or if recovery is justified under the terms of the grant agreement signed by a beneficiary of the transnational projects, the [Beneficiary] [Third Party] undertake a recovery procedure to be repaid the amounts in question by the beneficiary of the transnational project on whatever the terms and date they specify.
(The copies will be sent with an accompanying letter from the coordinator confirming they are conform to the declarations as received from each [beneficiary] [Third Party])

(b) For each reporting period a summary table for the total of the grants paid for all projects supported by the respective Beneficiary / Third Party and the Community contribution distributed to the final beneficiaries of the transnational projects according to the agreed principles within the consortium, following the table template below:

Legal Name of the [Beneficiary] [Third Party]	*Total amount granted during Period n (2, 3…)*	*Requested EC Contribution*		*Total amount granted (cumulating all Periods)*	*Requested EC Contribution*	
		Amount for the relevant period [9]	*As % of the total amount granted*		*Amount (cumulating all Periods)*	*As % of the total amount granted*
…						
TOTAL			*10*			*10*

[9] Amount as in Form C

The tables and the amounts reported must be consistent with the Form C and the Certificate on Financial Statements.

5.4 Specific obligations on the Beneficiaries and Third Parties concerning certificates on financial statements

Since the Commission has no direct contractual relationship with the *final beneficiaries* (the *beneficiaries of the transnational projects*), Annex III to the Grant Agreement imposes on each *Beneficiary* (and where applicable, each *Third Party* identified in Article 7) a number of additional obligations which are reflected in the declaration to be provided as part of the periodic reports during Phase 2 (see above 5.3.1)

These rules are a consequence of the fact that the ERA-NET Plus funding system involves a "*subvention en cascade"*. Only the costs incurred at the level of the Beneficiaries (and Third Parties) have to comply with the FP7 eligibility rules. The costs at the level of the *final beneficiaries* have to comply with the relevant **national** funding rules.
In **Form C**, under the category "Total funding of the Joint Selection List of Transnational Projects", specifically created for ERA-NET Plus actions, the total amount which the *Beneficiary/Third Party* has verified and paid to the *final beneficiaries*, has to be inserted. Under "Requested EC contribution" each *Beneficiary/Third Party* will fill in the amount agreed with the consortium. The amount and percentage in each individual Form C can vary, but in the summary financial statement the overall EC contribution must be equal to the percentage determined in the Annex III after the negotiation (which cannot be higher than 33%).

The requirements of the Grant Agreement concerning **Certificates on financial statements** follow this logic: *Beneficiaries* and *Third Parties* have to submit such certificates once the amount claimed is equal or higher than 375 000 €. In this specific context the certificate of the auditor has a limited scope and only confirms that the payments to the various *final beneficiaries* of the selected projects have actually been made and have been registered in the *Beneficiaries / Third Parties* accounting systems. The "*terms of reference and scope*" document shall be used, although all procedures normally to be performed by the auditors are not applicable in this Grant Agreement, where the only specific cost category to be declared as from the second reporting Period onwards is the "Total funding of the Joint Selection List of Transnational Projects". The auditors should, however, add a statement/declaration in their report in which they confirm that these costs are eligible in the context of the given ERA-NET Plus action.

Such a text is to be provided by the auditor as a statement (distinct from the Certificate on financial statements) with the following content:

"The costs of the "Total funding of the Joint Selection List of Transnational Projects" claimed on the enclosed audited Form C are compliant with the following eligibility conditions:

- *They are actual;*
- *They have been incurred by the Beneficiary or the Third Party;*
- *They have been incurred during the duration of the project;*
- *They are determined in accordance with the usual accounting and management principles and practices of the Beneficiary or Third Party. The accounting procedures used in the recording of costs and receipts respect the accounting rules of the State in which the Beneficiary is established. The Beneficiary/Third Party's internal accounting*

[10] The Community financial contribution shall be limited to a percentage [maximum 33 %] of the total grant paid to the selected transnational projects.

and auditing procedures must permit direct reconciliation of the costs declared in respect of the project with the corresponding financial statements and supporting documents;

- *They have been used for the sole purpose of achieving the objectives of the project and its expected results, in a manner consistent with the principles of economy, efficiency and effectiveness;*
- *They are recorded in the accounts of the Beneficiary; in the case of any contribution from Third Parties, they are recorded in the accounts of the third parties;*
- *They have been paid;*
- *They are indicated in the estimated overall budget in Annex I".*

As a further measure to safeguard the financial interests of the Community, Annex III foresees that each *Beneficiary/Third Party* shall take appropriate measures to protect *Community* funds, in particular to prevent irregularities, fraud or any other illegal activity. The *Commission* may request the *Beneficiaries* to carry out audits on the *beneficiaries of the transnational projects* in case of suspicion of fraud or irregularity.

5.5 Financial Audits and Controls

Eventually the possibility for the relevant Community bodies to carry out audits at *final beneficiary* level has to be secured. Annex III therefore stipulates that each *Beneficiary/Third Party* shall ensure that the Commission and the Court of Auditors are entitled to audit the *beneficiaries of the transnational projects* and that in this context the conditions laid down under paragraphs 1 to 5, 7 and 8 of Article II.22 are also applicable, *mutatis mutandis*, to the *final beneficiaries* . This allows the auditors from the Commission or the Court of Auditors to check whether the reimbursement at *final beneficiary* level complies with the national funding rules and their specific eligibility criteria.

The particularities of the ERA-NET Plus Grant Agreement presented above (e.g. reporting periods, audit requirements, etc) should be carefully taken in consideration for the establishment of the individual contracts between the consortium and the funded projects.

6 PROPOSALS FOR ERA-NET PLUS ACTIONS AND THEIR EVALUATION

6.1 Calls for proposals

Topics for the submission of ERA-NET Plus proposals are identified in the annual work programmes of the individual Cooperation Themes and certain parts of the Capacities Programme. Annex 4 of the Cooperation work programme provides an overview on which research topics ERA-NET Plus proposals are called for.

6.2 Content of a proposal

The proposals should include the following chapters for ERA-NET CSAs:

1. Scientific and/or technical quality, relevant to the topics addressed by the call
   - Concept and objectives of the ERA-NET action
   - Contribution to the coordination of high quality research
   - Quality and effectiveness of the coordination mechanisms, and associated work plan
2. Implementation
   - Management structure and procedures
   - Individual participants
   - Consortium as a whole
   - Resources to be committed

3. Impact
   - Expected impacts listed in the relevant work programme
   - Spreading excellence, exploitation results, dissemination knowledge
4. Ethical issues

The different chapters for ERA-NET Plus proposals could include and address the following:

- how it complies with the respective work programme
- clearly defined objectives of the ERA-NET Plus and the target of the proposed joint call
- the impact that the ERA-NET Plus will generate in terms of helping to structure the European Research Area; aspects like expected number of proposals and participants (types and numbers) would be helpful based on prior experiences
- rationale for the joint call in the prescribed area (critical mass, international programme, building on national strengths, others)
- description of the capabilities of the participating programmes to fund the joint call
- description of each partner and the national or regional research programme it owns or manages, its role within its national system and its role within the ERA-NET Plus, with an indication of the budgets of the programme involved
- cooperation in the joint call with Third countries, if appropriate
- description of the activities foreseen throughout the lifetime of the ERA-NET Plus and their timetable
- plans for the organisation, management and governance of the ERA-NET Plus joint call
- justification for the Community support requested
- means to ensure sustainability of the activities beyond the selection of transnational proposals
- organisation of the monitoring of the selected transnational projects
- financial reporting
- dissemination plan of results and/or experiences.

6.3 Evaluation of proposals

The evaluation of proposals for ERA-NET Plus Actions will involve a single stage submission procedure. The Commission will arrange the evaluation of proposals received according to the principles of "peer review" by independent experts. The proposals will not be evaluated anonymously but could be evaluated remotely. The evaluation procedure will be further described in the Commission's evaluation manual and in the relevant Work Programmes and Guides for Applicants. The evaluation criteria below apply to ERA-NET Plus actions as specified in the respective guide for applicants for the whole ERA-NET scheme, Coordination and Support Actions:

Evaluation criteria applicable to **Coordination and support actions (Coordination)**		
S/T QUALITY **"Scientific and/or technological excellence (relevant to the topics addressed by the call)"**	**IMPLEMENTATION** **"Quality and efficiency of the implementation and the management"**	**IMPACT** **"Potential impact through the development, dissemination and use of action results"**
• Soundness of concept, and quality of objectives • Contribution to the coordination of high quality research • Quality and effectiveness of the co-ordination mechanisms, and associated work plan	• Appropriateness of the management structure and procedures • Quality and relevant experience of the individual participants • Quality of the consortium as a whole (including complementarity, balance) • Appropriateness of the allocation and justification of the resources to be committed (budget, staff, equipment)	• Contribution, at the European [and/or international] level, to the expected impacts listed in the work programme under relevant topic/activity • Appropriateness of measures for spreading excellence, exploiting results, and dissemination knowledge, through engagement with stakeholders, and the public at large.
Specific criteria for ERA-NET and ERA-NET Plus: • The management should be supported by a suitable governance structure involving the participating organisations at an appropriate level	Specific criteria for ERA-NET and ERA-NET Plus: • In reference to the applicable work programme, does the proposed ERA-NET / ERA-NET Plus action pool the necessary resources between national programmes and the Community and does it represent the most appropriate type of public funding for this pre-defined area	Specific criteria for ERA-NET and ERA-NET Plus: • The participants should be the key actors within their national or regional research systems. • The ERA-NET activities should lay the foundations for a durable cooperation between the partners involved. • Is there a clearly identified and agreed European added value through a variable geometry approach

7 GRANT AGREEMENT NEGOTIATION

If a proposal for an ERA-NET Plus is selected, its coordinator will be invited to enter in negotiation to prepare a Grant Agreement. It will be made through the specific web application NEF using in particular Grant Preparation Forms (GPF) designed for ERA-NET Plus.

The negotiation will determine the final reimbursement rate of the total joint call budget to fund the transnational projects (lower or equal to 33%) and:

- The total EC contribution to the project, which cannot be higher than the amount calculated with the reimbursement rate of the total joint call budget; the latter should be charged under OTHER in the specific version of the GPF for ERA-NET Plus;

- The possible limited part of the EC contribution which may reimburse some management costs (for Phase 1). It should be **included** in the total (max.) EC contribution, calculated as mentioned above. For the negotiation purposes these costs should appear under the

category "Management". The principles of identification of direct and indirect costs indicated under Article II.15 apply under this category.

- The pre-financing under art. 6 of the Grant Agreement which is calculated as a **sum** of a) the EC contribution requested for Phase 1 (for the 1st reporting period, in principle) and b) 5% of the total EC contribution for the Guarantee Fund.

- The pre-financings under ANNEX III.5 of the Grant Agreement which is calculated as follows:

  - **III.5.a)** should contain the EC contribution requested for the management of the call (for Phase 1, in principle)

  - **III.5.b)** should contain the amount corresponding to the second reporting period, as indicated in the table of estimated breakdown of costs for this period in Annex I and in the A5 form (GPF). This second pre-financing shall be agreed as the Community contribution to finance the topping-up of the first 12 months of funding of the transnational projects.

As part of the negotiation[11] each participating organisation in an ERA-NET Plus action is required to:

- Identify the research programme(s) with which they participate in the respective ERA-NET Plus,
- Identify their role (Programme Manager or Programme Owner),
- Programme Owners provide confirmation for Programme Managers that these are mandated to manage their programme,
- Ensure to provide to the NETWATCH information system all information needed on the programme and its implementation.

8 POSSIBLE CORRECTIONS AFTER PHASE 1

Following the reception and acceptation of the final list of transnational projects, an amendment to the Grant Agreement may be necessary at least in the following cases:

- Where the volume of the call is lower than initially foreseen: in this case the EC contribution needs to be reduced, together with the contribution to the Guarantee Fund and the pre-financing under Art. 6 (due to the reduction of the contribution to the Guarantee Fund, and potentially the pre-financing under Art. III.5.b). Annex I would be updated with the final list of selected transnational projects;

- Where the volume of the call remains the same, an amendment is not absolutely necessary, unless any specific request or reasons arises. Nevertheless, the update of Annex I, to include the list of the selected transnational projects can still help the management of the Grant Agreement.

9 POSSIBLE EVOLUTION OF AN ERA-NET PLUS

ERA-NET Plus actions may add partners after they have entered into force, but without any increase of the maximum EC contribution and provided that it is NOT later than the date of the publication of the joint call. The standard Commission amendment procedures and deadlines for

[11] See Appendix 1: Participant declaration (page 24)

amendments need to be respected (see Amendments Guide for FP7 Grant Agreements on http://cordis.europa.eu/fp7/find-doc_en.html).

10 CONSORTIUM AGREEMENT

The participants shall conclude a consortium agreement. Such a consortium agreement may include:

- the decision-making processes they will use;
- conflict resolution issues;
- the sharing out of tasks and resources among the participants;
- the management of the Community contribution;
- aspects concerning defaulting partners;
- specific arrangements concerning intellectual property rights to be applied among the participants who will contribute to the generation of knowledge, in compliance with the general arrangements stipulated in the contract;
- the process to monitor the funded projects and legal follow up;
- if appropriate reference to Third country participations and agreements with those countries;
- any other provision necessary to ensure an effective governance and a sound management of the ERA-NET Plus action.

11 INTELLECTUAL PROPERTY ASPECTS

IPR issues will be addressed in the consortium agreement. Some guiding principles might also be found in the general ERA-NET issue paper (available on http://cordis.europa.eu/fp7/coordination/eranet_en.html).

12 FOLLOW UP AND MONITORING

The Commission services will monitor the ERA-NET Plus Action so as to ensure proper execution of the work according to the terms of the contract, to protect the Community's financial interests and to ensure maximum synergy and coherence with other Actions within the Seventh Framework Programme and evaluate its early impacts.

A project officer will be assigned to follow-up each ERA-NET Plus Action. Persons with the appropriate expertise may assist the project officer.

The project officer will also perform a first important review for each ERA-NET Plus Action at the stage of the selection of transnational projects. The project officer, or another Commission official, should be present as independent observer at the Evaluation Step Two based on international peer review. This review shall assess the conformity of the implementation of the joint call and, in particular, review the proper implementation of the independent international peer review and the establishment of the selection list of transnational projects.

Later reviews (as appropriate) would consist of a strategic analysis examining, in particular, what the European added value of the ERA-NET Plus is in reference to the work programme applicable and an analysis of the work performed against the grant agreement established.

Any ERA-NET Plus that is found not to be performing in conformity with the grant agreement provisions may have its contract terminated.

13 INFORMATION AND ASSISTANCE

Further information may be found in the general ERA-NET issue paper.

Other relevant information on the ERA-NET scheme can be found on http://cordis.europa.eu/fp7/coordination/eranet_en.html.

Furthermore, any questions on the ERA-NET scheme can be addressed to the Research Enquiry Service: http://www.ec.europa.eu/research/enquiries.

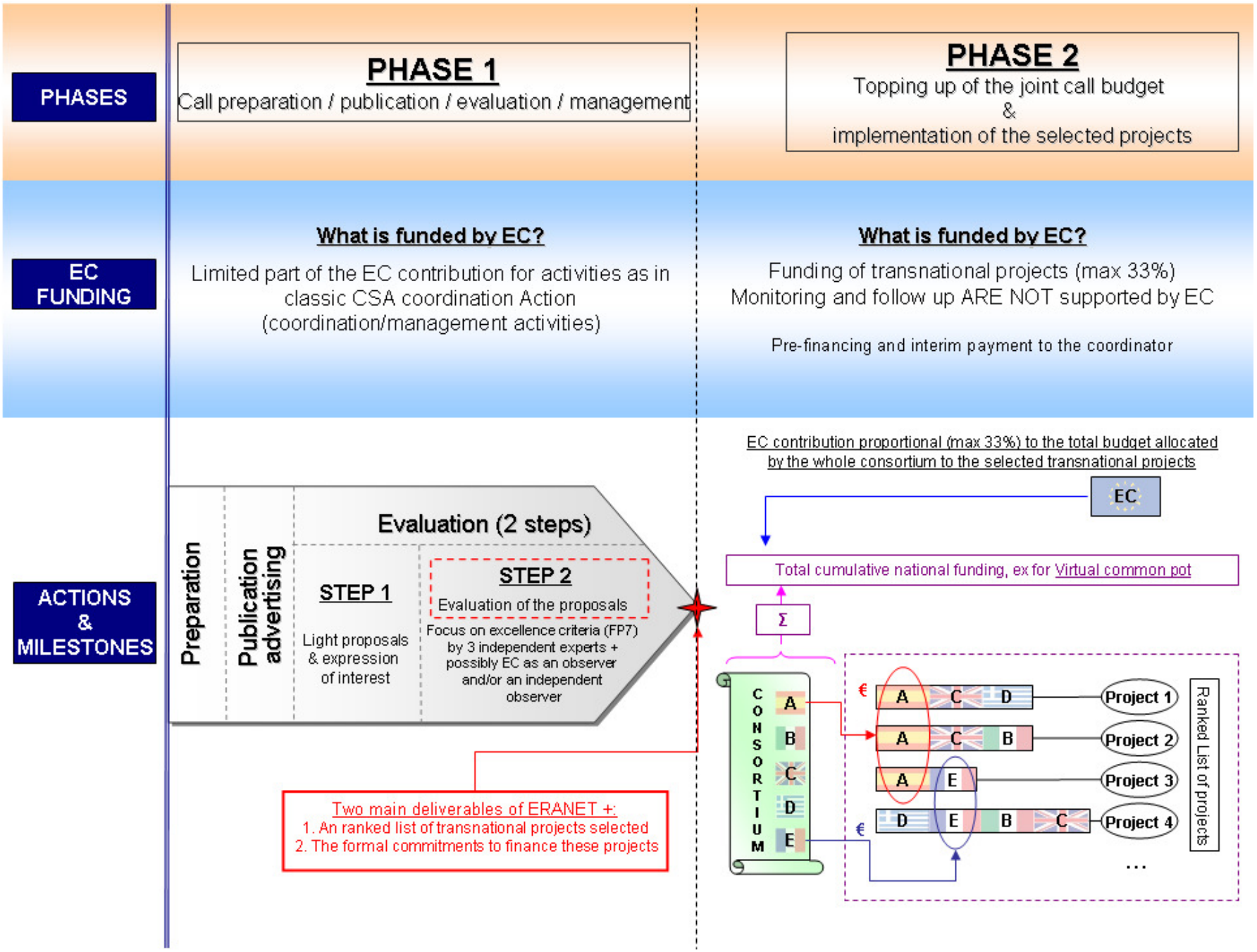
PHASES
PHASE 1
Call preparation / publication / evaluation / management
PHASE 2
Topping up of the joint call budget
&
implementation of the selected projects
EC FUNDING
What is funded by EC?
Limited part of the EC contribution for activities as in classic CSA coordination Action (coordination/management activities)
What is funded by EC?
Funding of transnational projects (max 33%)
Monitoring and follow up ARE NOT supported by EC
Pre-financing and interim payment to the coordinator
ACTIONS & MILESTONES
Preparation
Publication advertising
Evaluation (2 steps)
STEP 1
Light proposals & expression of interest
STEP 2
Evaluation of the proposals
Focus on excellence criteria (FP7) by 3 independent experts + possibly EC as an observer and/or an independent observer
Two main deliverables of ERANET +:
1. An ranked list of transnational projects selected
2. The formal commitments to finance these projects
EC contribution proportional (max 33%) to the total budget allocated by the whole consortium to the selected transnational projects
EC
Total cumulative national funding, ex for Virtual common pot
Σ
CONSORTIUM
A
B
C
D
E
€
Project 1
Project 2
Project 3
Project 4
...
Ranked List of projects

APPENDIX 1: PARTICIPANT DECLARATION

Instructions for the
Annex A "Participant Declaration" to the Grant Agreement for
ERA-NET and ERA-NET plus actions

The ERA-NET scheme is intended for Programme Owners and Programme Managers to identify national and regional programmes they coordinate or open up mutually. Therefore, eligible partners for ERA-NET and ERA-NET Plus actions are only:

- **Programme Owners**: typically national ministries/regional authorities responsible for defining, financing or managing research programmes carried out at national or regional level.

- **Programme Managers** (such as research councils or funding agencies) are other national or regional organisations that implement research programmes under the supervision of the programme owners.

- **Programme Owners** (typically national ministries/regional authorities) that do not yet have a running or fully fledged research programme at the moment of submitting an ERA-NET proposal. Programme Owners that are planning and have committed to set up such a programme are also eligible if their participation is well justified and adds value to the overall programme coordination. This approach shall help and encourage countries or regions having less diverse research programmes (in particular new Member States) to be integrated in the ERA-NET scheme under FP7.

During contract negotiation each participating organisations in an ERA-NET or ERA-NET Plus action is required to:

- Identify the research programme(s) with which they participate in the respective ERA-NET or ERA-NET Plus,
- Identify their role (Programme Manager or Programme Owner),
- Programme Owners provide confirmation for Programme Managers that these are mandated to manage their programme,
- Ensure to provide to the NETWATCH information system all information needed on the programme and its implementation.[12]

Please use the enclosed Annex A with the letterhead of your own organisation, complete and sign accordingly.

Note: *On top of the minimum number of participants legally required for an ERA-NET, other legal private entities such as charities which also manage research programmes, may participate and receive Community funding, if their participation is well justified and adds value to the overall programme coordination. Please note that research organisations or universities which are not programme owners or managers are not eligible partners for ERA-NET actions.*

[12] The NETWATCH website (www.ec.europa.eu/netwatch) provides information, analysis and mutual learning on transnational R&D programme cooperation. Information about the ERA-NET will be disseminated via the NETWATCH web site and its participants will have access to the information given by NETWATCH and the tools it offers. In exchange, NETWATCH requests the ERA-NET to contribute to the NETWATCH information base. One of the related responsibilities of the ERA-NET participants is to provide information on the participating national or regional programmes. In addition the coordinator or other designated person from the ERA-NET need to regularly provide information about the activities of the ERA-NET to NETWATCH.

ANNEX A to the Grant Agreement for ERA-NET and ERA-NET plus actions
(To be filled out by each participant, please copy this text onto the letterhead of your own organisation)

Participant declaration for the [*ERA-NET / ERA-NET Plus action*] [*Acronym of the ERA-NET/ERA-NET Plus*]

The undersigned [*Name of the authorised representative*] declares that [*name of participating organisation*] will participate with the following research programmes carried out at national or regional level in the [*ERA-NET / ERA-NET Plus action*] [*Acronym of the ERA-NET/ERA-NET Plus*]:

[*Title of the research programme*][13]

☐ [*name of participating organisation*] is **Programme Owner and Programme Manager** for the above mentioned programme.

☐ [*name of participating organisation*] is **Programme Owner** for the above mentioned programme. The organisation in charge of its implementation as Programme Manager is [*name of the organisation acting as Programme Manager*] and I declare that they have been mandated to manage the programme.

☐ [*name of participating organisation*] is **Programme Manager** for the above mentioned programme. The Programme Owner for this programme is [*name of the organisation being the Programme Owner*] and they have provided a declaration confirming the mandate to manage the programme on their behalf[14].

(if applicable:)
☐ [*name of participating organisation*] is a **Programme Owner** that does not yet have a running or fully fledged research programme for the participation in [*Acronym of the ERA-NET*], but is planning and committed to set up such a programme.

Further, the undersigned declares to ensure that [*name of participating organisation*] will contribute to NETWATCH by providing the necessary information on the respective research programme(s).

Name and signature Date and stamp

[13] In case you participate with more than one research programme: please duplicate this part for each programme.

[14] If the Programme Owner is participating in the ERA-NET/ERA-NET Plus action only its participants declaration is needed. Please use Annex B in case the Programme Owner is not part of the consortium.

ANNEX B to the Grant Agreement for ERA-NET and ERA-NET plus actions
(To be filled out by Programme Owners not participating in the consortium.
Please copy this text onto the letterhead of the Programme Owner responsible
for the research programme.)

Declaration for the [*ERA-NET / ERA-NET Plus action*] [*Acronym of the ERA-NET/ERA-NET Plus*]

The undersigned [*Name of the authorised representative*] declares that [*Name of participating organisation acting as Programme Manager*] has been mandated by [*Name of the organisation being the Programme Owner*] to manage the following research programme[s]:

[*Title of the research programme(s)*]

Name and signature Date and stamp

APPENDIX 2: SPECIFIC ANNEX III OF THE MODEL GRANT AGREEMENT FOR ERANET-PLUS